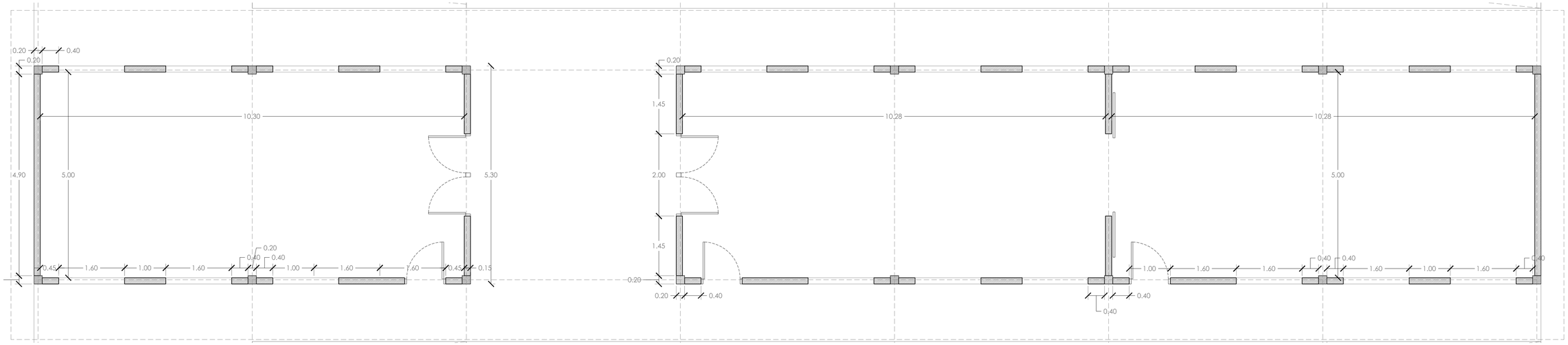

2. WALLS
Architecture, Blockwalls.
Level +1.60 m.

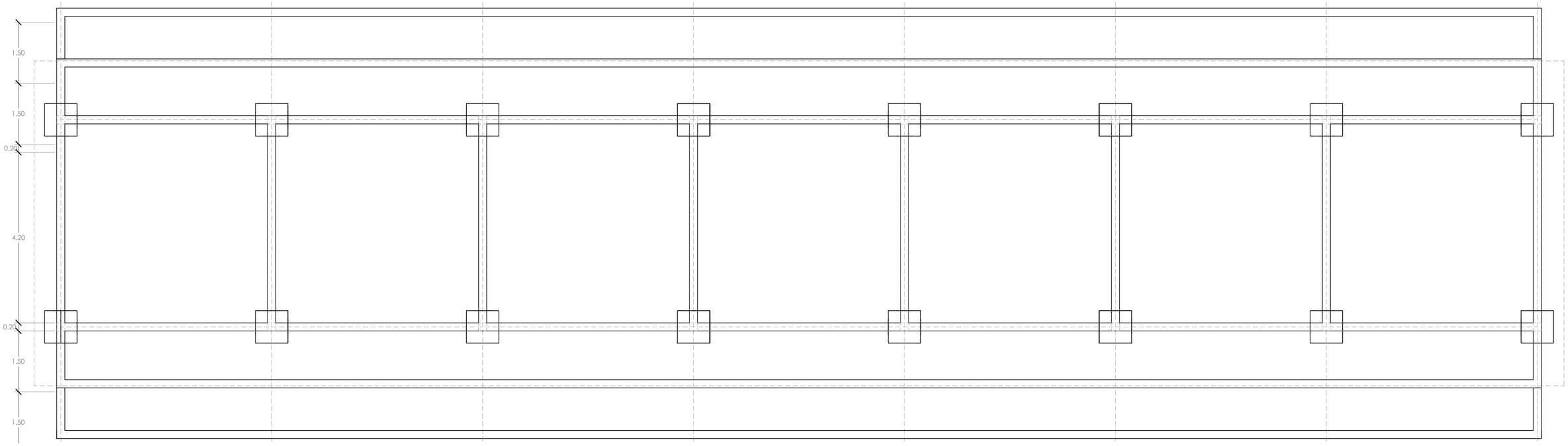

1. MASONRY
Pits - Foundation Columns and Ground beams.

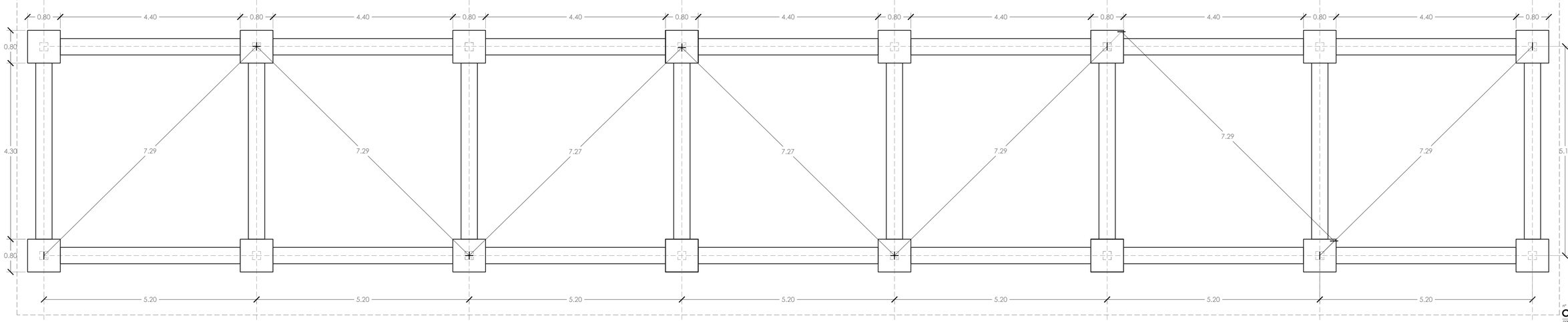

0. FOUNDATION
Pits - Foundation Columns and Ground beams.

n° sheet
C.1
05/07/2018
north
BASORI - GAMBIA
scale
1 / 50
sheet format
DINA1
description
FOUNDATIONS, BLOCKWALLS